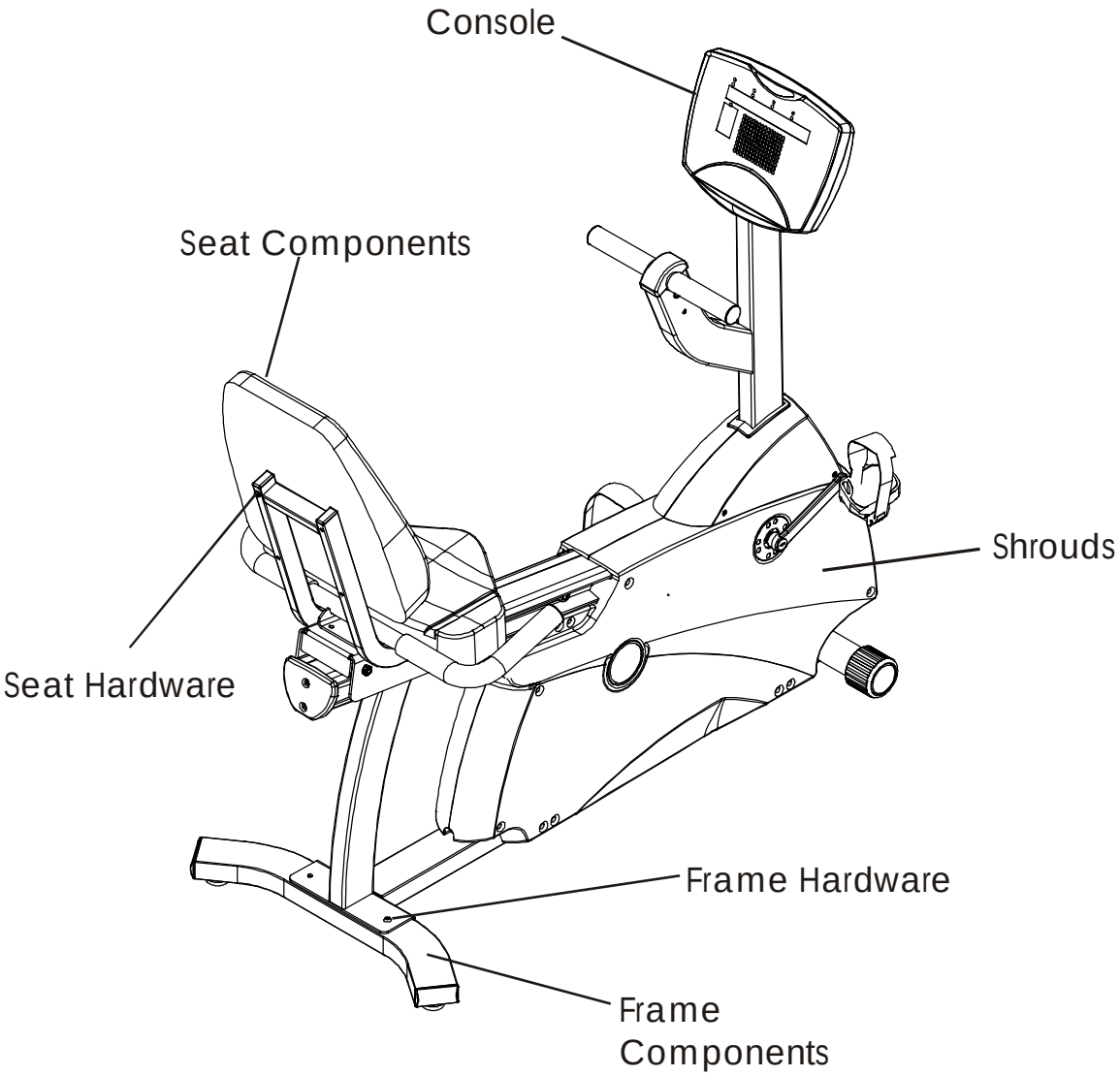

Example of a Starting Serial Number CR300060210000001			
CR300	06	0210	000001
Model #	Plant	Year/Month	Starting Serial Number

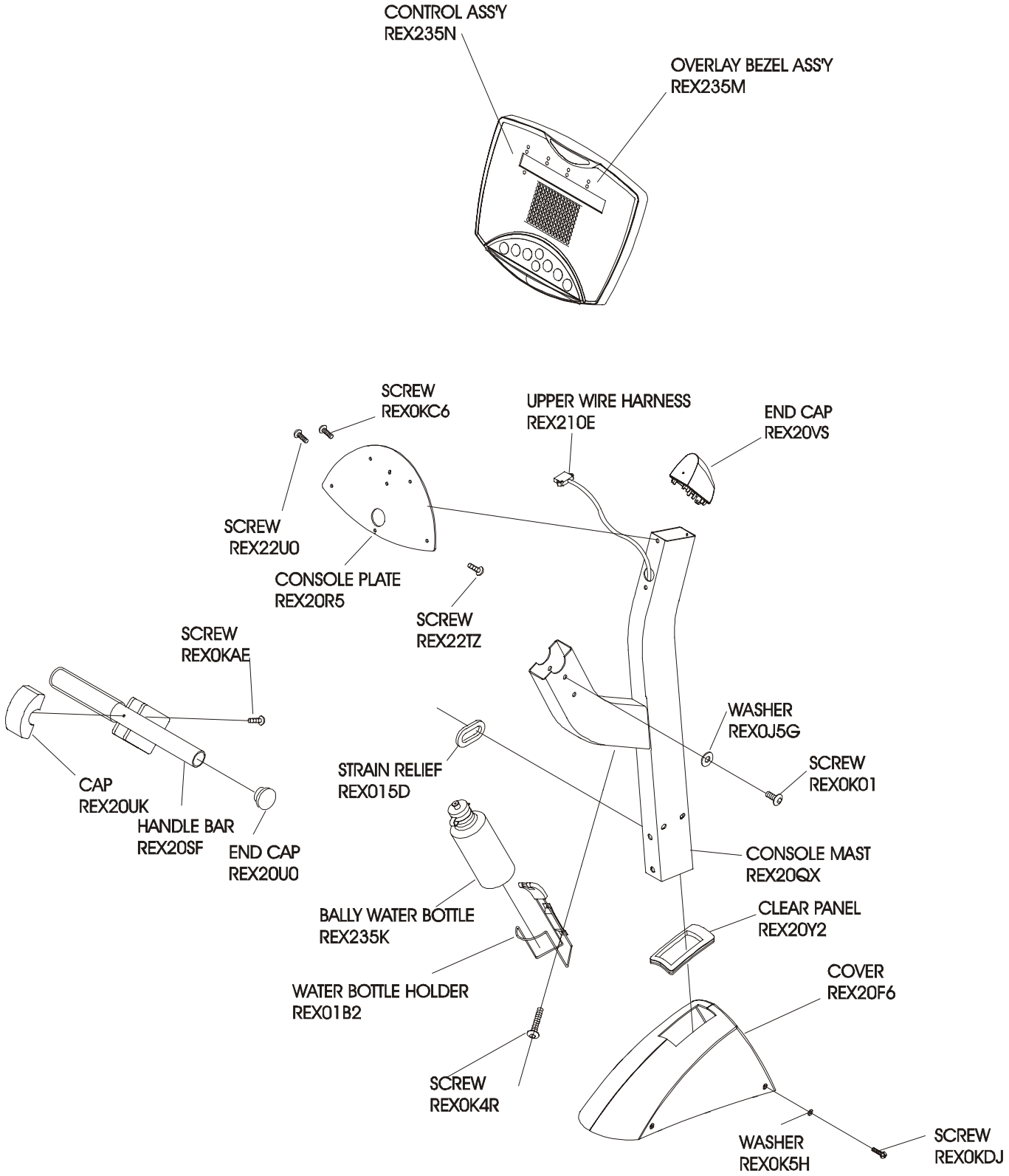
CONTROL ASS'Y
REX235N
OVERLAY BEZEL ASS'Y
REX235M
SCREW
REX0KC6
UPPER WIRE HARNESS
REX210E
END CAP
REX20VS
SCREW
REX22U0
CONSOLE PLATE
REX20R5
SCREW
REX22TZ
SCREW
REX0KAE
WASHER
REX0J5G
STRAIN RELIEF
REX015D
SCREW
REX0K01
CAP
REX20UK
HANDLE BAR
REX20SF
END CAP
REX20U0
CONSOLE MAST
REX20QX
BALLY WATER BOTTLE
REX235K
CLEAR PANEL
REX20Y2
WATER BOTTLE HOLDER
REX01B2
COVER
REX20F6
SCREW
REX0K4R
WASHER
REX0K5H
SCREW
REX0KDJ

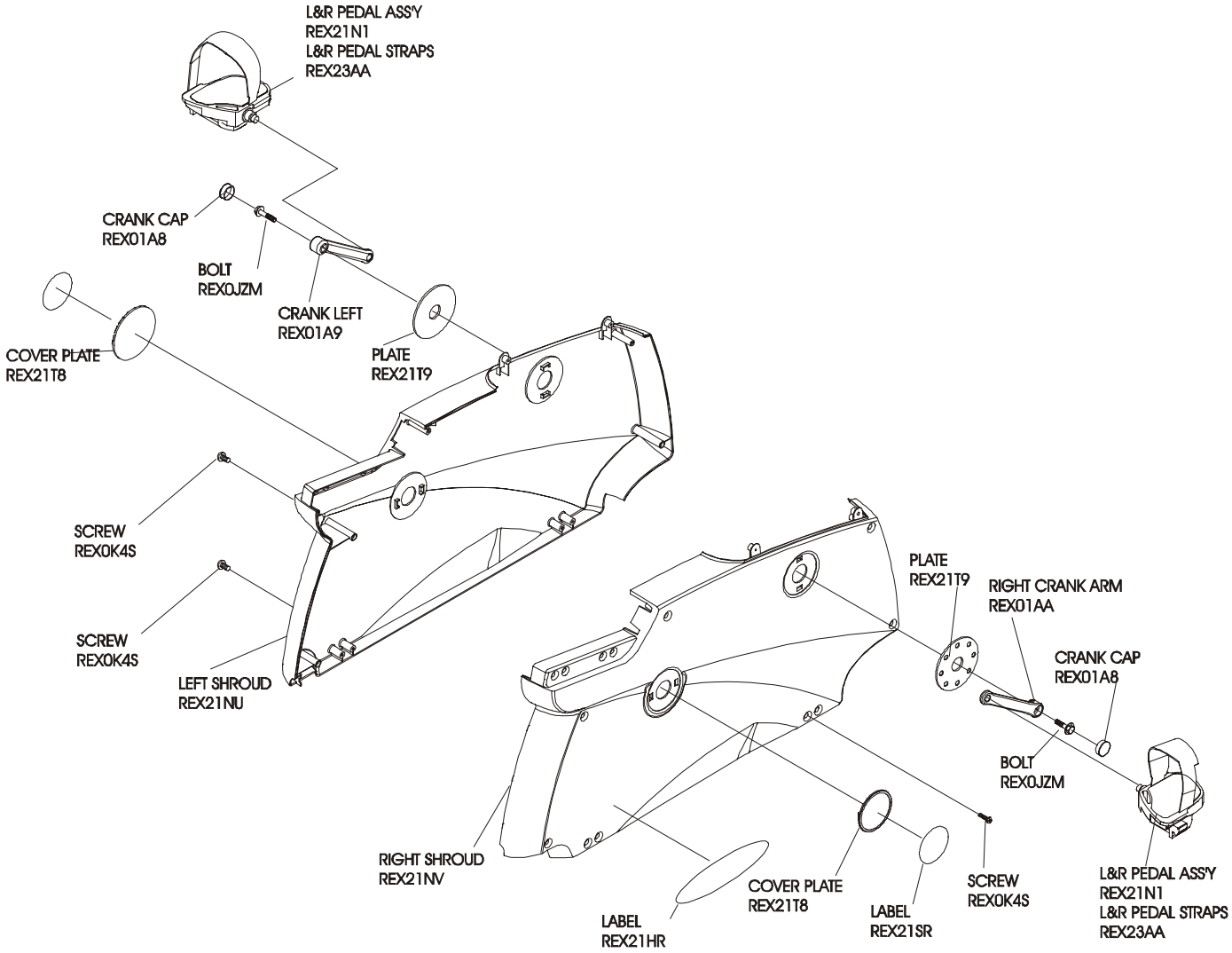
L&R PEDAL ASS'Y
REX21N1
L&R PEDAL STRAPS
REX23AA
CRANK CAP
REX01A8
BOLT
REX0JZM
CRANK LEFT
REX01A9
COVER PLATE
REX21T8
PLATE
REX21T9
SCREW
REX0K4S
SCREW
REX0K4S
LEFT SHROUD
REX21NU
PLATE
REX21T9
RIGHT CRANK ARM
REX01AA
CRANK CAP
REX01A8
BOLT
REX0JZM
RIGHT SHROUD
REX21NV
LABEL
REX21HR
COVER PLATE
REX21T8
LABEL
REX21SR
SCREW
REX0K4S
L&R PEDAL ASS'Y
REX21N1
L&R PEDAL STRAPS
REX23AA

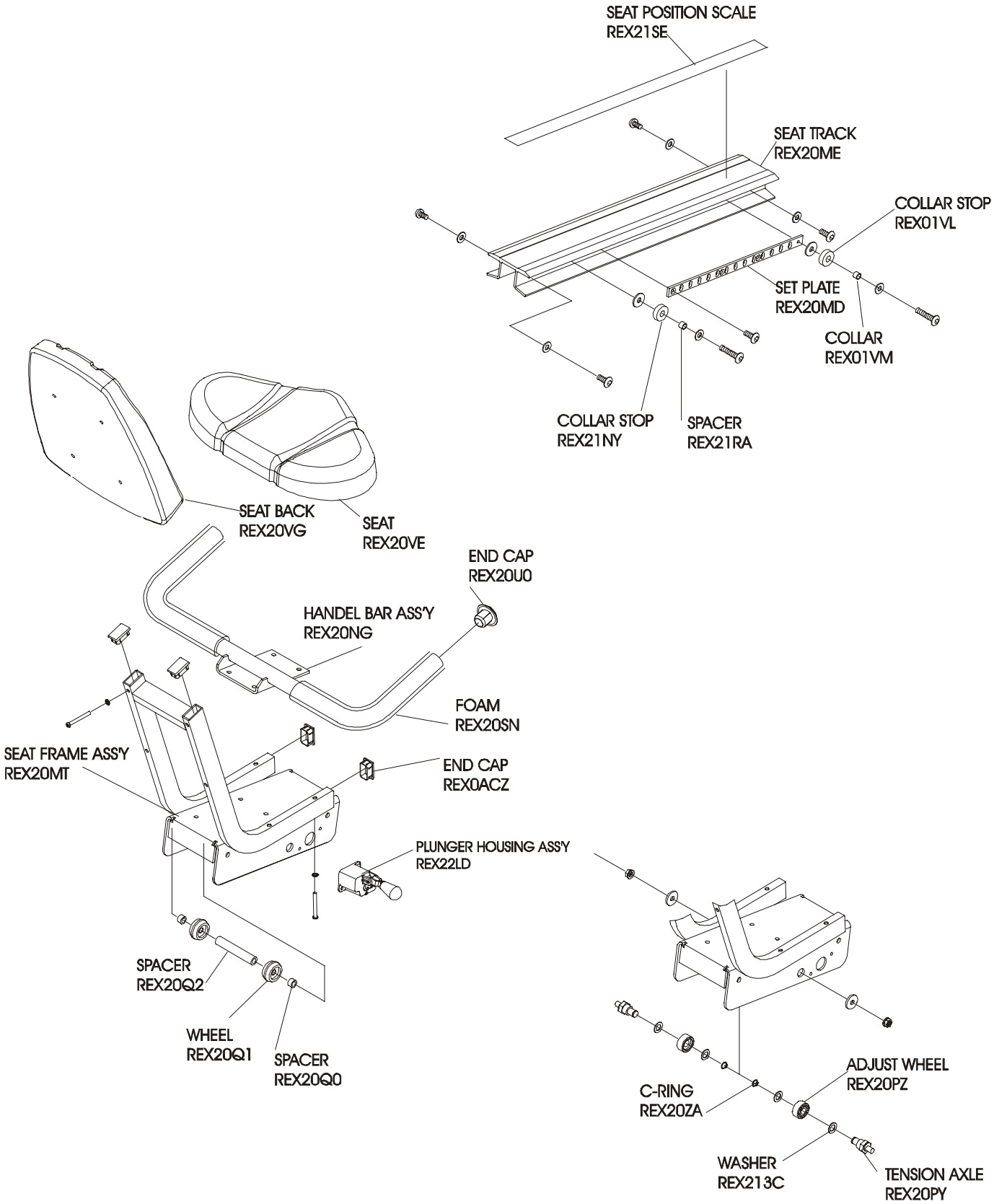
SEAT POSITION SCALE
REX21SE
SEAT TRACK
REX20ME
COLLAR STOP
REX01VL
SET PLATE
REX20MD
COLLAR
REX01VM
COLLAR STOP
REX21NY
SPACER
REX21RA
SEAT BACK
REX20VG
SEAT
REX20VE
END CAP
REX20U0
HANDEL BAR ASS'Y
REX20NG
FOAM
REX20SN
SEAT FRAME ASS'Y
REX20MT
END CAP
REX0ACZ
PLUNGER HOUSING ASS'Y
REX22LD
SPACER
REX20Q2
WHEEL
REX20Q1
SPACER
REX20Q0
ADJUST WHEEL
REX20PZ
C-RING
REX20ZA
WASHER
REX213C
TENSION AXLE
REX20PY

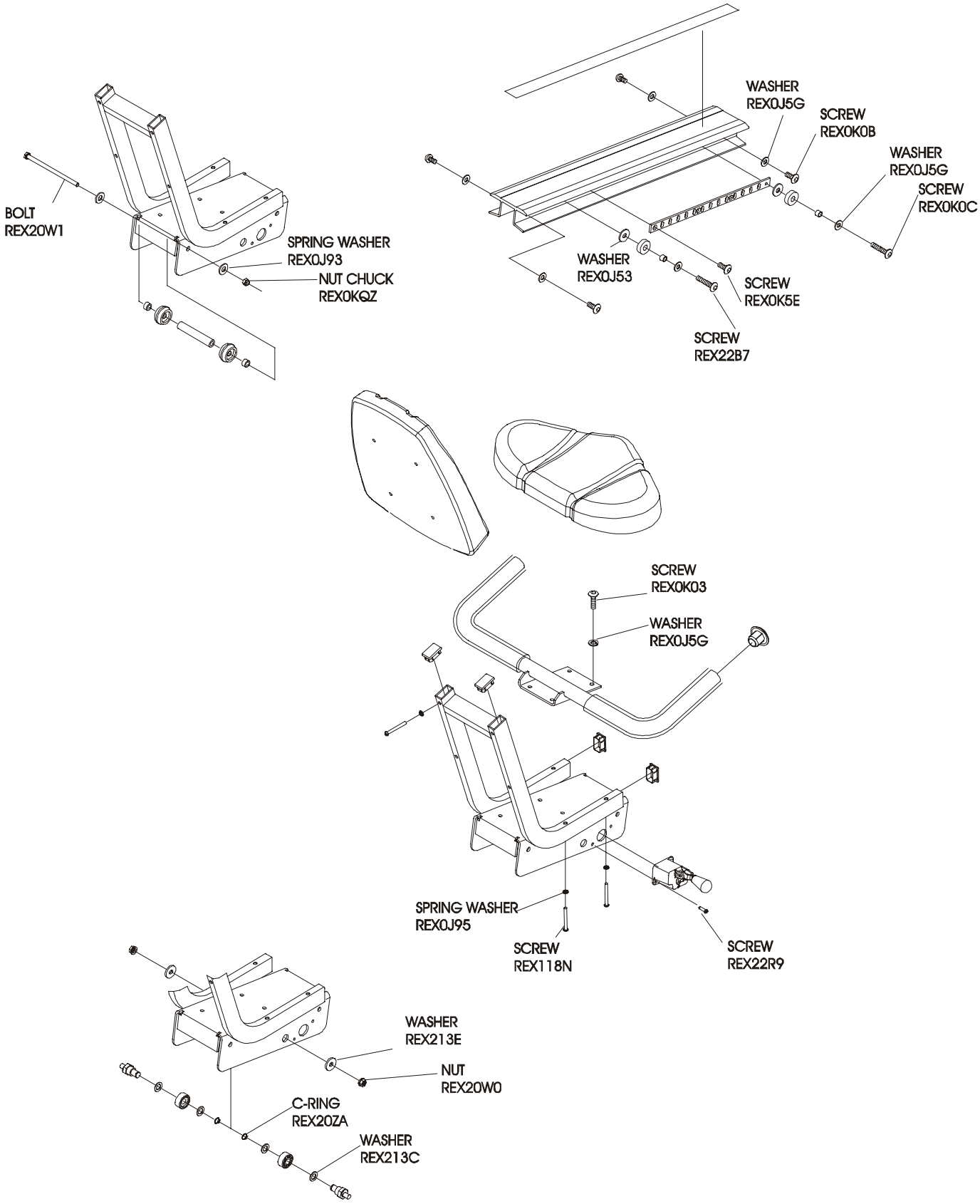
BOLT
REX20W1
SPRING WASHER
REX0J93
NUT CHUCK
REX0KQZ
WASHER
REX0J5G
SCREW
REX0K0B
WASHER
REX0J5G
SCREW
REX0K0C
WASHER
REX0J53
SCREW
REX0K5E
SCREW
REX22B7
SCREW
REX0K03
WASHER
REX0J5G
SPRING WASHER
REX0J95
SCREW
REX118N
SCREW
REX22R9
WASHER
REX213E
NUT
REX20W0
C-RING
REX20ZA
WASHER
REX213C

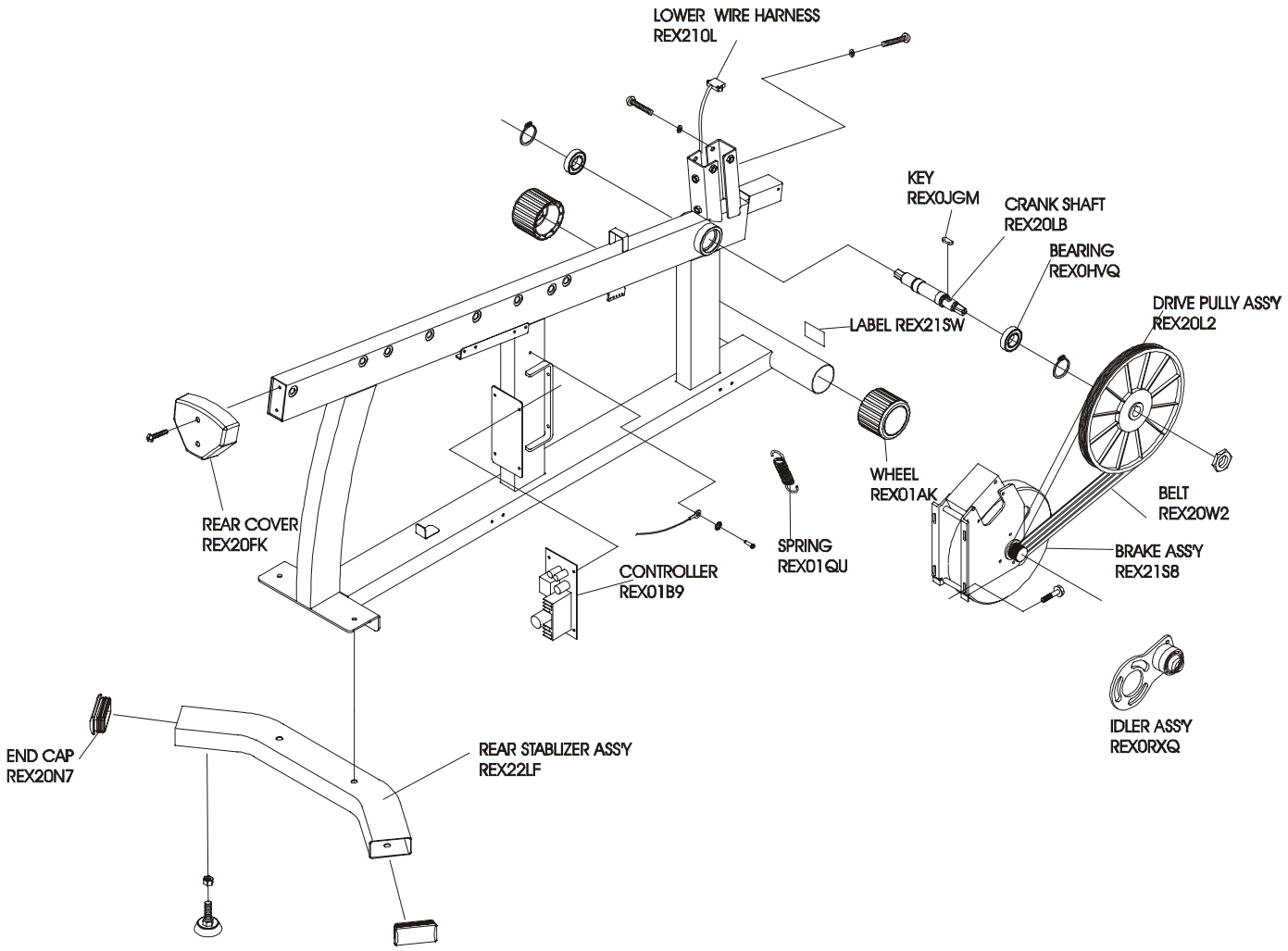
LOWER WIRE HARNESS
REX210L
KEY
REX0JGM
CRANK SHAFT
REX20LB
BEARING
REX0HVQ
DRIVE PULLY ASS'Y
REX20L2
LABEL REX21SW
WHEEL
REX01AK
BELT
REX20W2
REAR COVER
REX20FK
SPRING
REX01QU
BRAKE ASS'Y
REX21S8
CONTROLLER
REX01B9
IDLER ASS'Y
REX0RXQ
END CAP
REX20N7
REAR STABLIZER ASS'Y
REX22LF

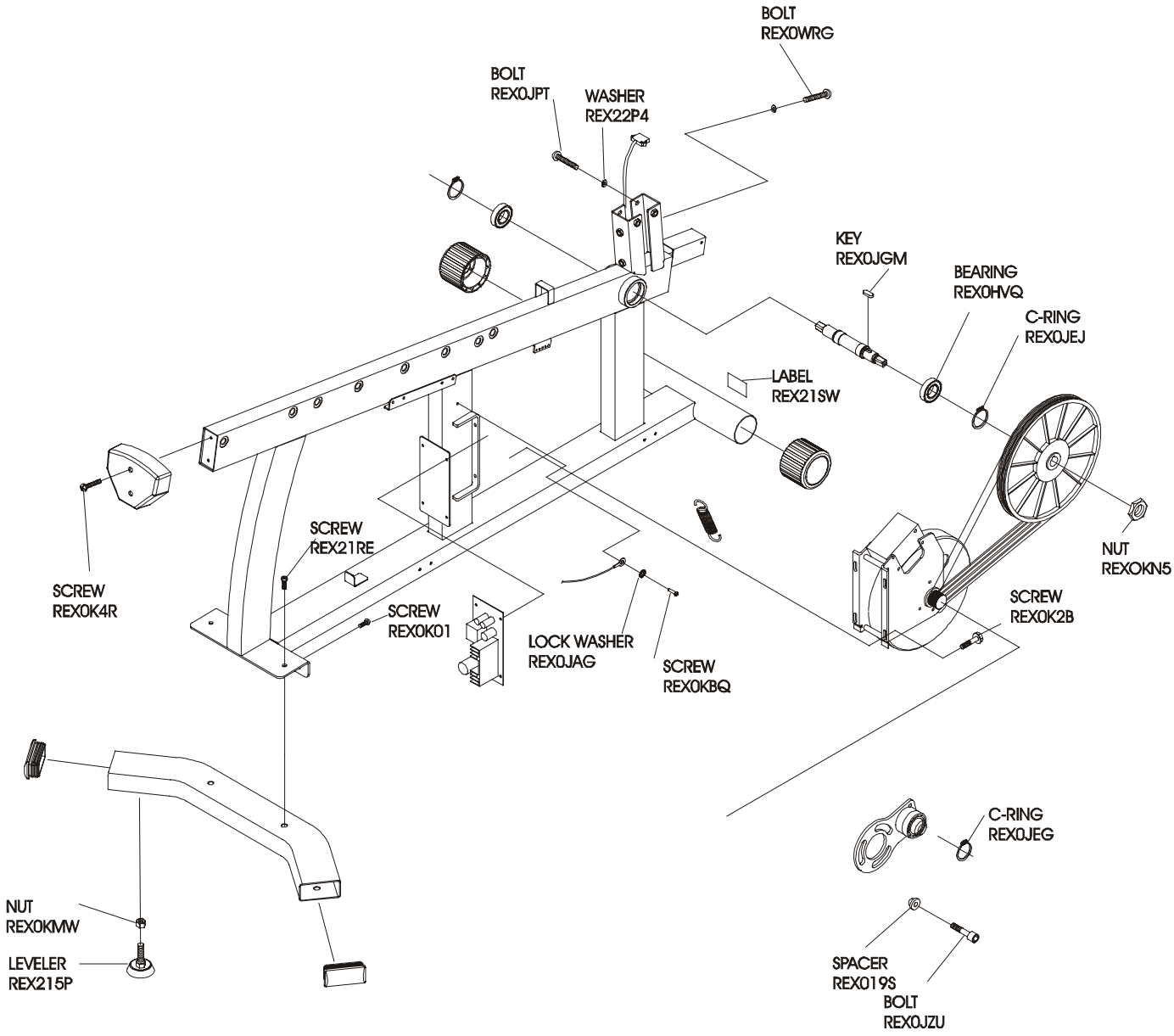
BOLT
REX0WRG
BOLT
REX0JPT
WASHER
REX22P4
KEY
REX0JGM
BEARING
REX0HVQ
C-RING
REX0JEJ
LABEL
REX21SW
SCREW
REX21RE
SCREW
REX0K4R
SCREW
REX0K01
LOCK WASHER
REX0JAG
SCREW
REX0KBQ
NUT
REX0KN5
SCREW
REX0K2B
C-RING
REX0JEG
NUT
REX0KMW
LEVELER
REX215P
SPACER
REX019S
BOLT
REX0JZU